UniFi® Access Hub

ui.com/install

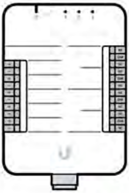

1

ui.com/install

A

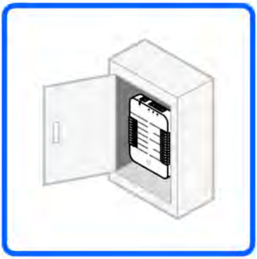

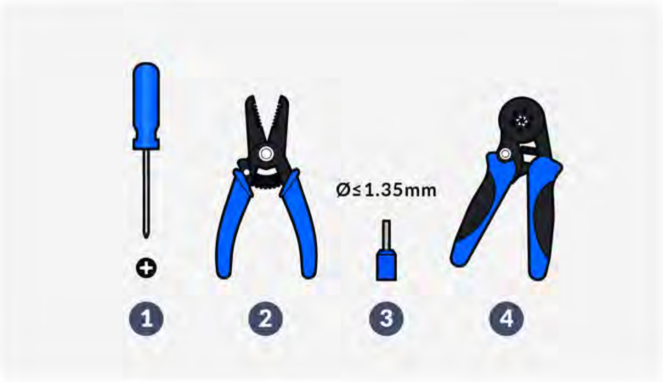
Ø≤1.35mm
1
2
3
4

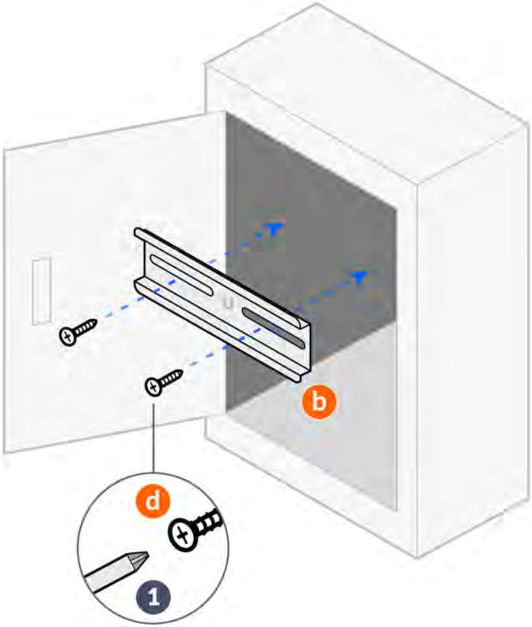

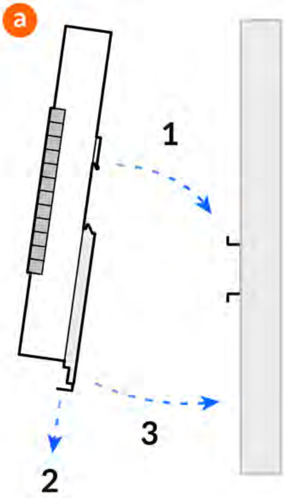

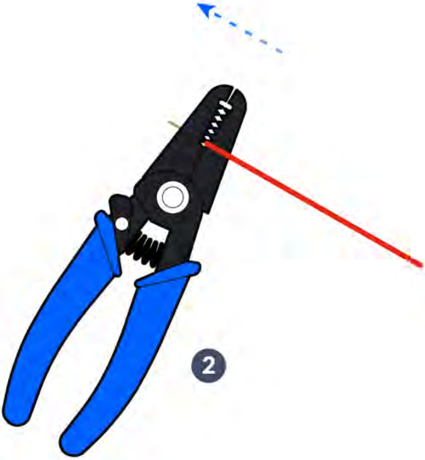

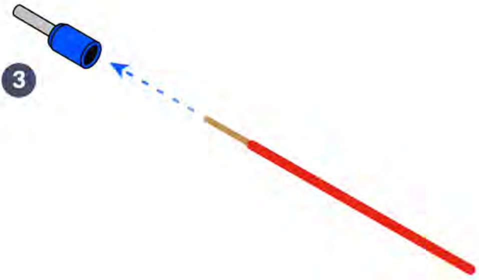

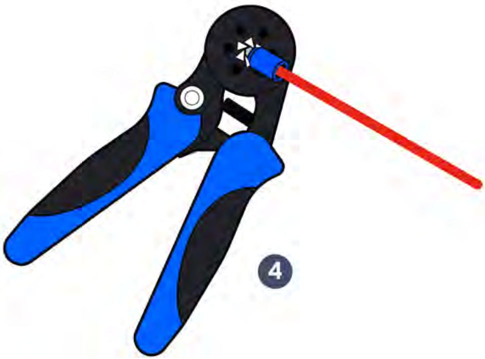

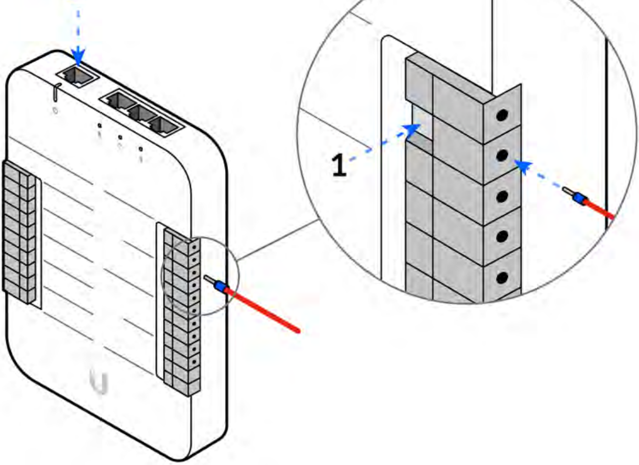

B

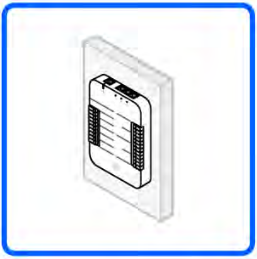

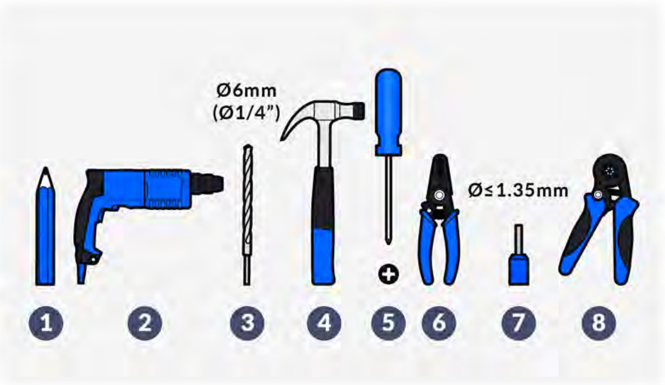
Ø6mm
(Ø1/4")
Ø≤1.35mm
1
2
3
4
5
6
7
8

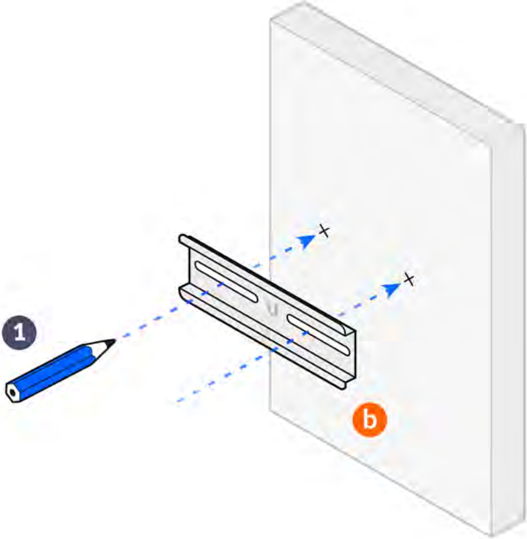

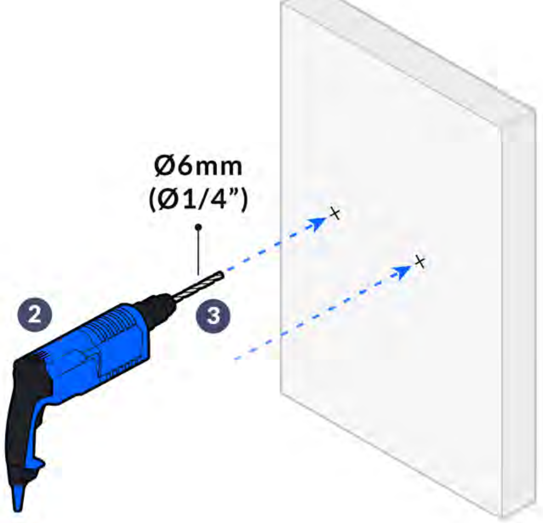

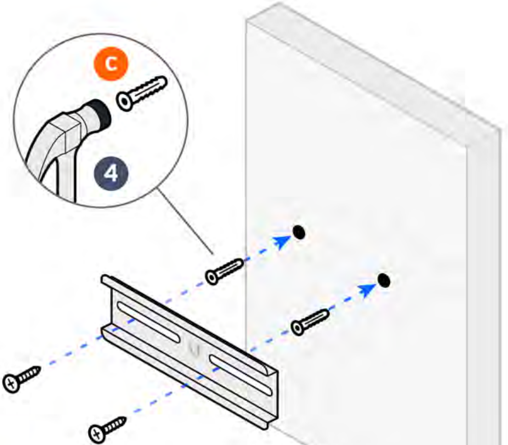

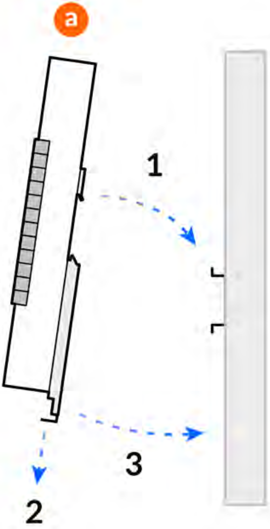

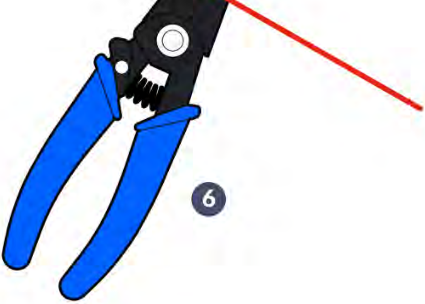

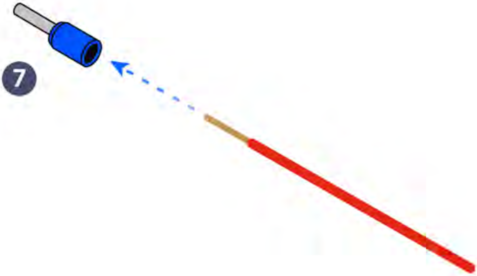

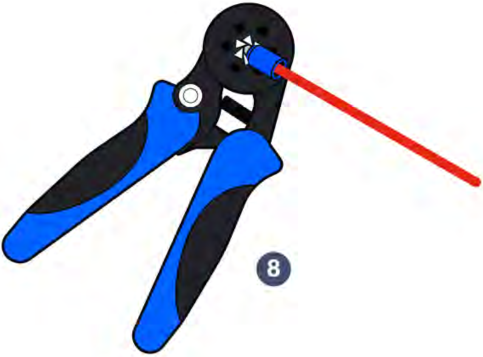

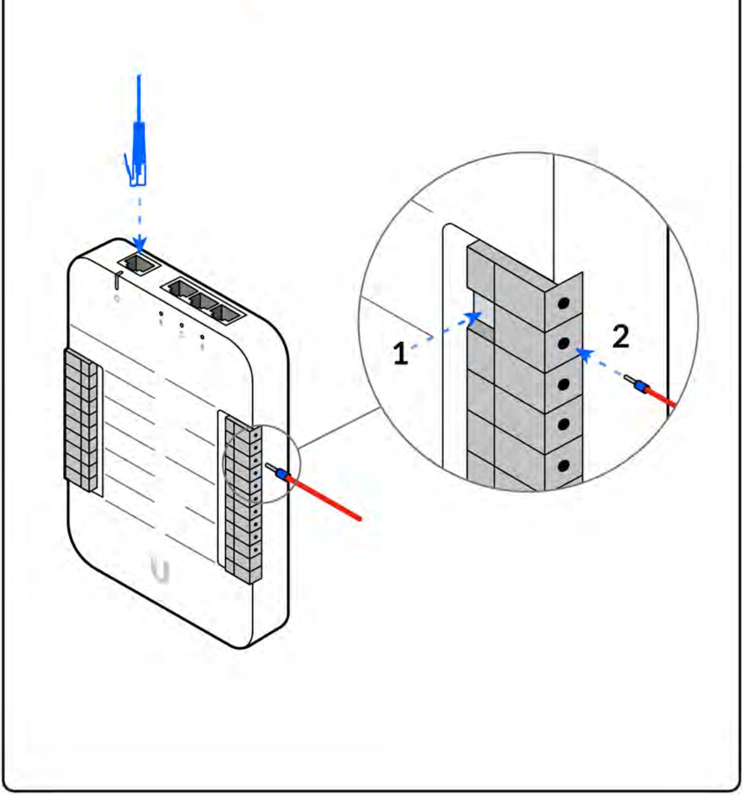

2

ui.com/install

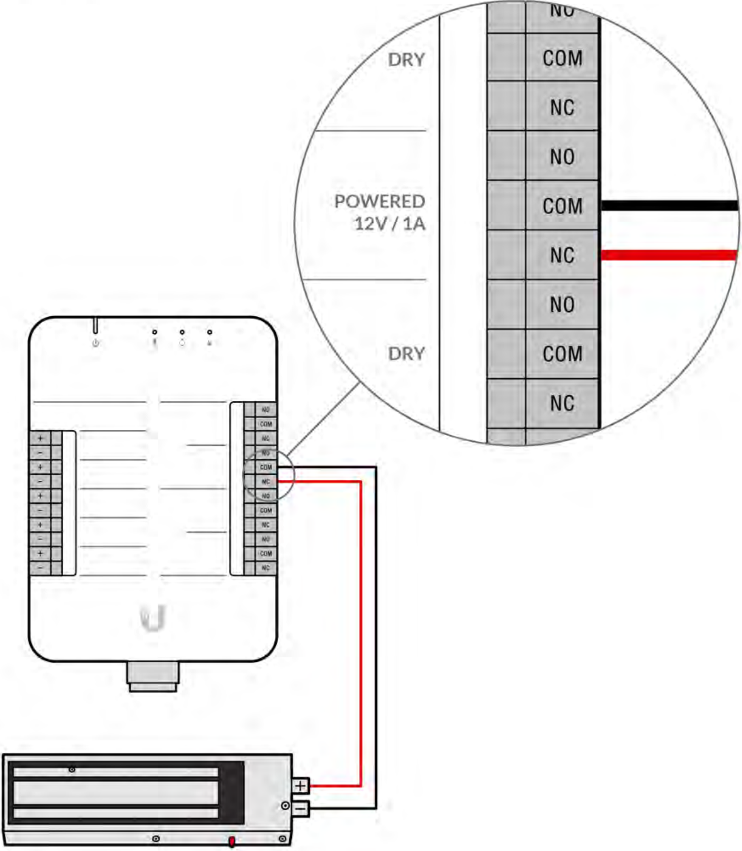
DRY
POWERED
12V / 1A
DRY
NO
COM
NC
NO
COM
NC
NO
COM
NC
+
−

Fail-Safe Lock

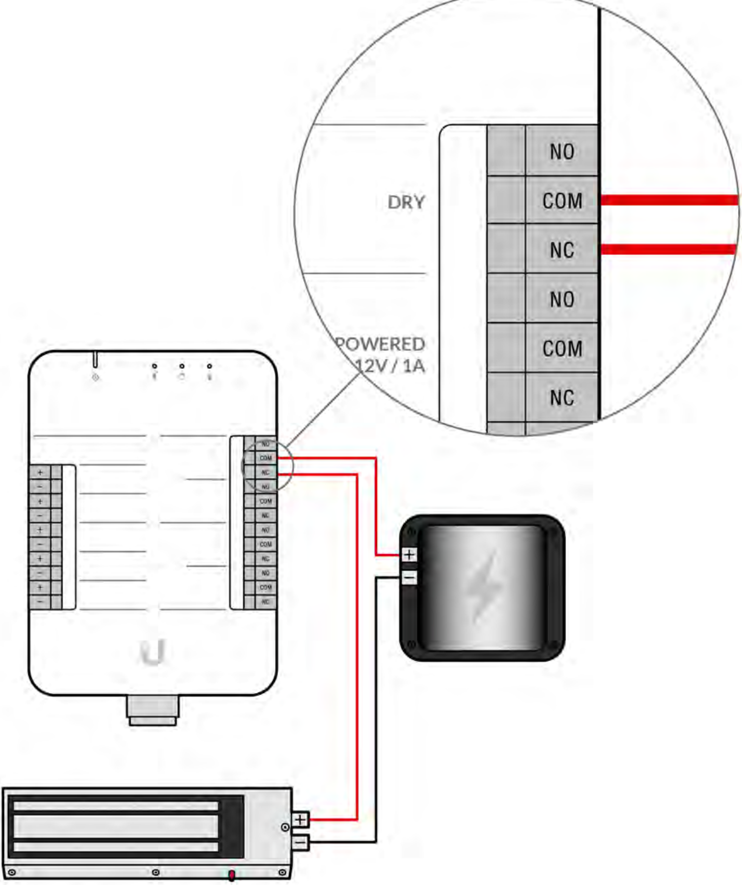
NO
COM
DRY
NC
NO
COM
POWERED
12V / 1A
NC
+
−
+
−

Fail-Safe Lock

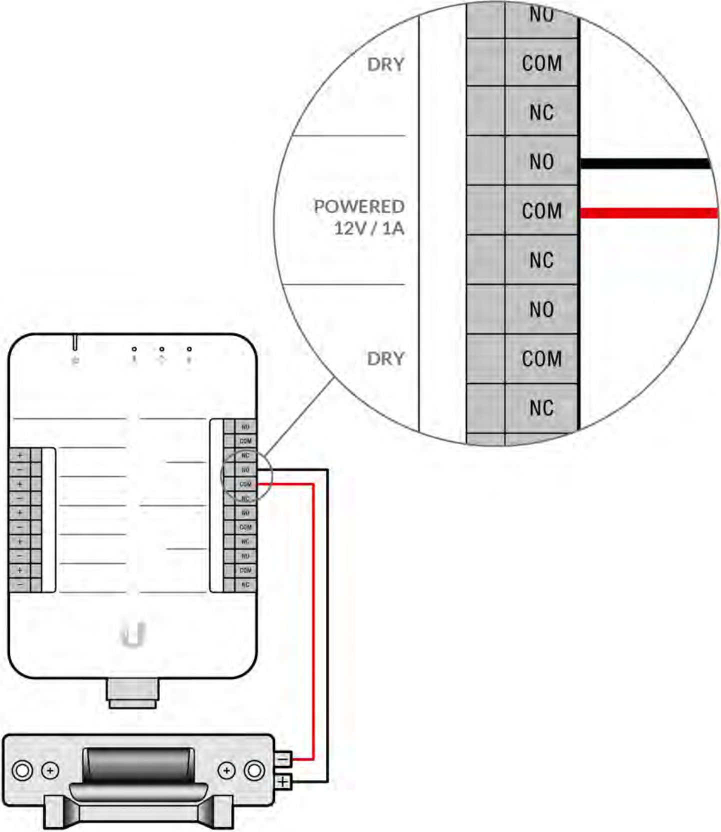
DRY
POWERED
12V / 1A
DRY
NO
COM
NC
NO
COM
NC
NO
COM
NC
+
−
+
−
+
−
+
−
+
−
NO
COM
NC
NO
COM
NC
NO
COM
NC
NO
COM
NC
−
+

Fail-Secure Lock

Push Button

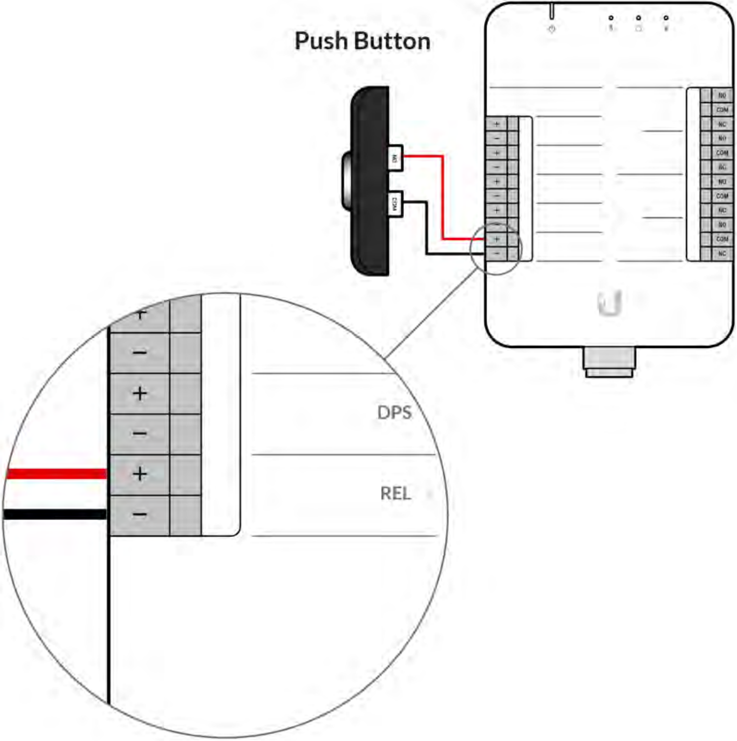
NO
COM
NO
COM
NC
NO
COM
NC
NO
COM
NC
NO
COM
NC
+
−
+
−
DPS
+
−
REL

Door Position Switch (Door Sensor)

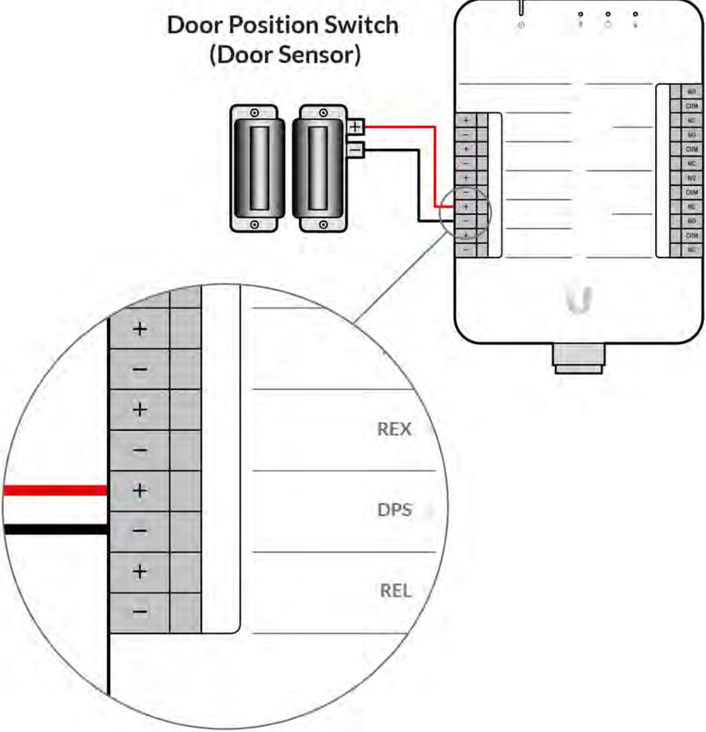
+
−
NO
COM
NC
REX
DPS
REL

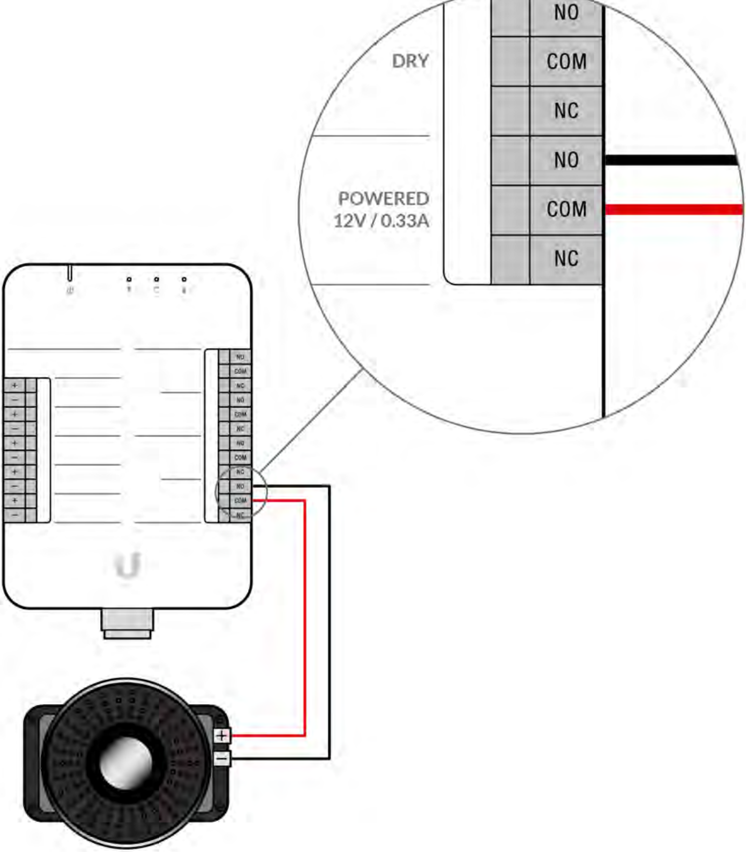

NO
DRY
COM
NC
NO
POWERED
12V / 0.33A
COM
NC
+
−
Siren

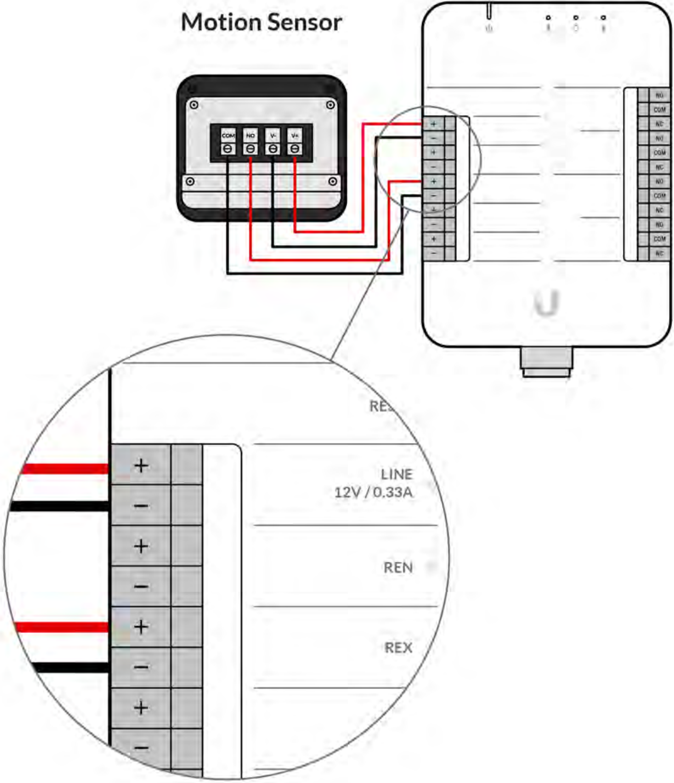
Motion Sensor
COM
NO
V-
V+
+
−
NO
COM
NC
RE
LINE
12V / 0.33A
REN
REX

3

ui.com/install

Internet

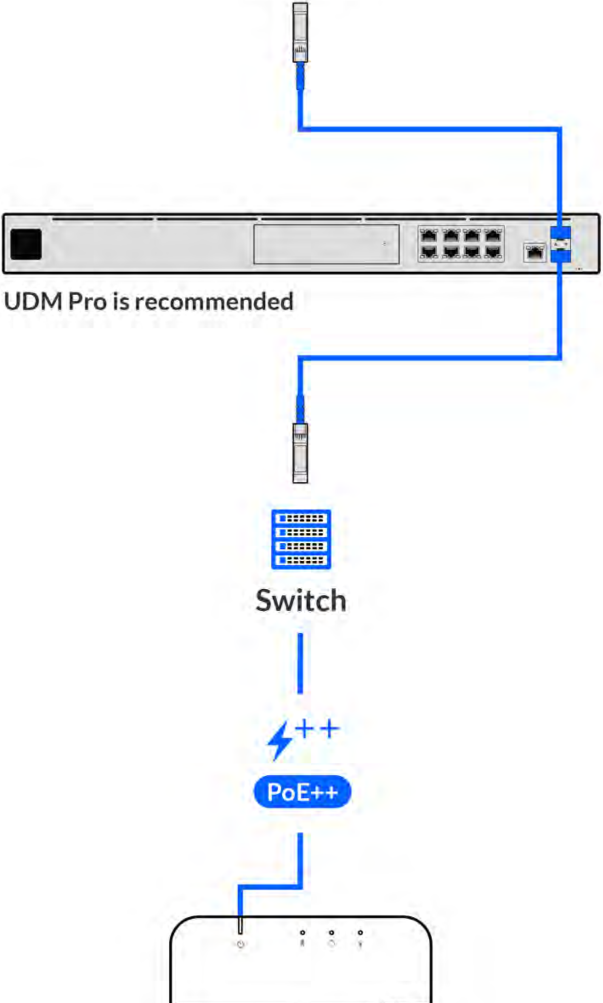

UDM Pro is recommended
Switch
++
PoE++

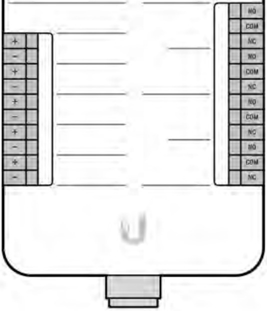
+
−
+
−
+
−
+
−
+
−
NO
COM
NC
NO
COM
NC
NO
COM
NC
NO
COM
NC

4

ui.com/install

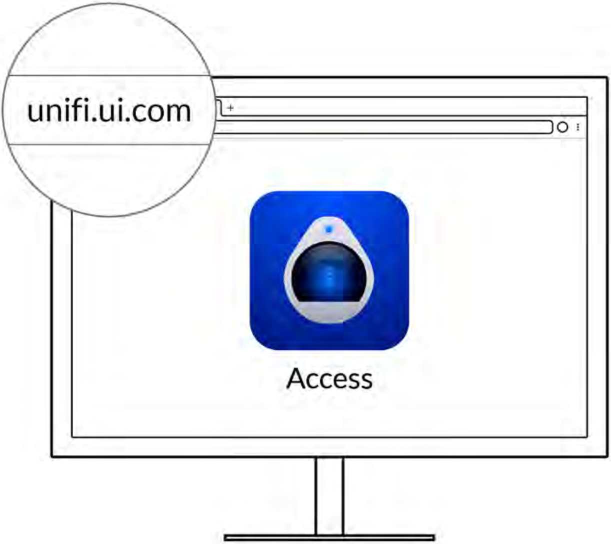
unifi.ui.com
Access

Installation Video

Get Answers
help.ui.com

UI Support